

TAIWAN MOTORS

37GB3530 SERIES

Type 37GB3530

Model No.	Voltage	NO LOAD		AT MAXIMUM EFFEICIENCY				STALL		gear
		SPEED	CURRENT	SPEED	CURRENT	TORQUE	OUTPUT	TORQUE	CURRENT	Ratio
	V	rpm	A	rpm	A	kg. cm	W	kg. cm	A	
530-153	12	40±4	0.12	31±3	0.7	3.6	---	15	2.8	1:153
530-216	12	30±3	0.2	22±2	0.8	4.5	---	20	2.8	1:216
530-230	12	25±2.5	0.12	19±2	0.7	5	---	20	2.8	1:230
530-325	12	10±1	0.08	7±0.7	0.6	3.5	---	15	2.8	1:325
530-537	12	5±0.5	0.08	3.6±0.35	0.6	6	---	20	2.8	1:537

DIMENSION

DIMENSION (UNIT : mm)

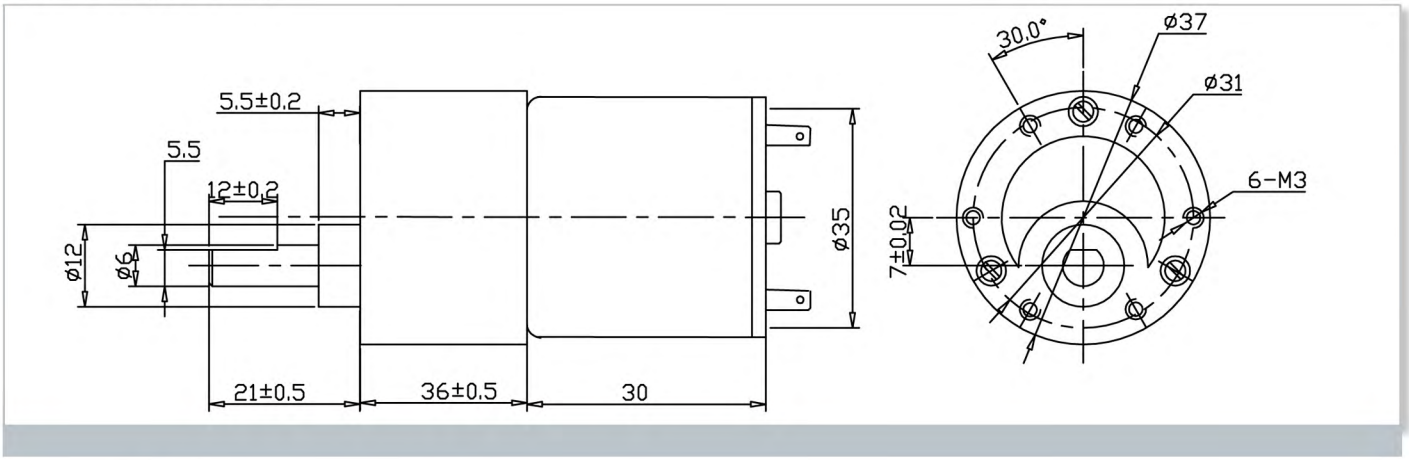

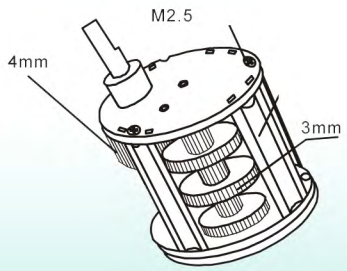

Reduction Ratio	1:8-1:24	1:32-1:72	1:87-1:216	1:237-1:648	1:672-1:1944
	24.5	28	31.5	35	39

● To customize motors, please contact with us or our agent.